15004 Tischgestell Schickeria Schwarz Ø110cm

EAN: 4025621150046

Email: info@kare.de
KARE Design GmbH Zeppelinstraße 16, 85748 Garching-Hochbrück Germany

Geschäftsführende Gesellschafter: Jürgen Reiter, Peter Schönhofen
KARE Design GmbH HRB 164 249 Amtsgericht München Sitz: München Steuernummer: Finanzamt München für Körperschaften, 143/153/40064 USt-ID: DE 250 622 249

www.kare.de www.kare-design.de

Table Schickeria MDF Top & Steel Base Assembly Instruction

KARE DESIGN

Tips： Using the received product boxes or packaging contents during assembly will prevent flooring and product damage. The extra screws are for spare parts.

Table Top x 1

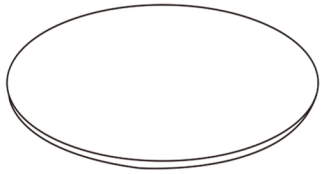

Square Plate x 1

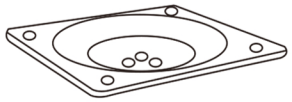

1.Remove the "A" screw counterclockwise

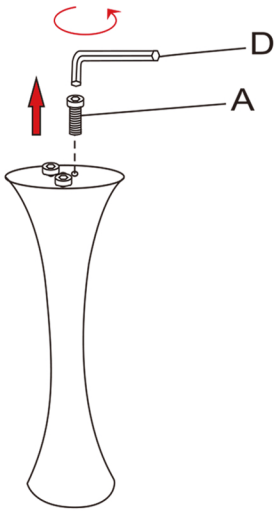

2.Combine "A"and "B" and rotate clockwise

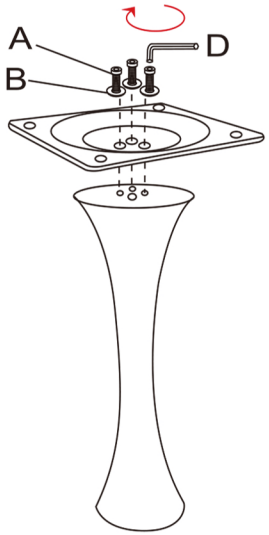

3.Turn the table leg over.

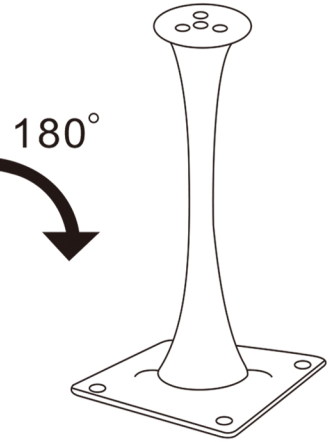

4.

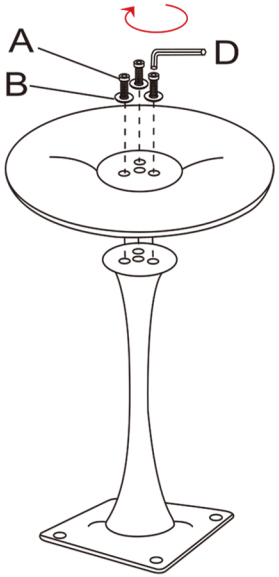

Table Leg x 1

Table Base x 1

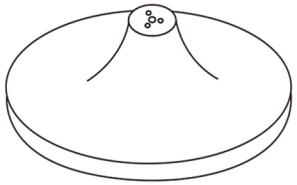

A	M8x30mm	6
B		10
C	M6x13mm	4
D	M5	1

5.Combine the assembled table stand with the table top.

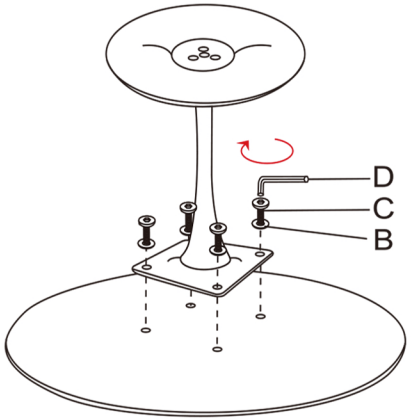

6.Turn the assembled table over, never force the table leg to turn over, may cause the nut to fall off.

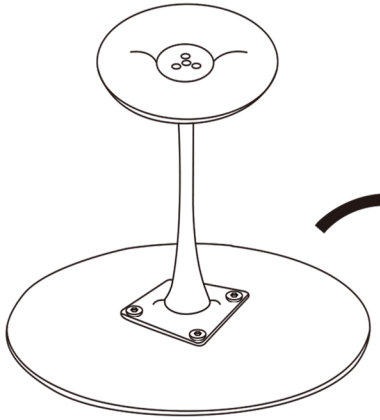
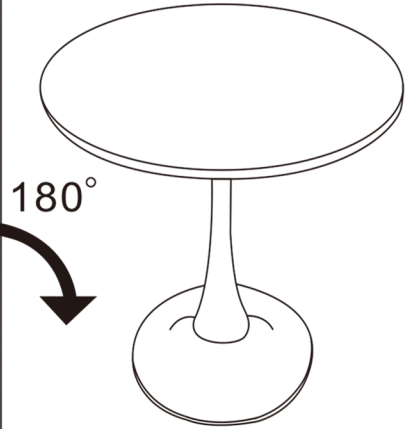
7.Thank you for your support of KARE